BC3359

REVISIONS			
REV.	DESCRIPTION	DATE	APPROVED

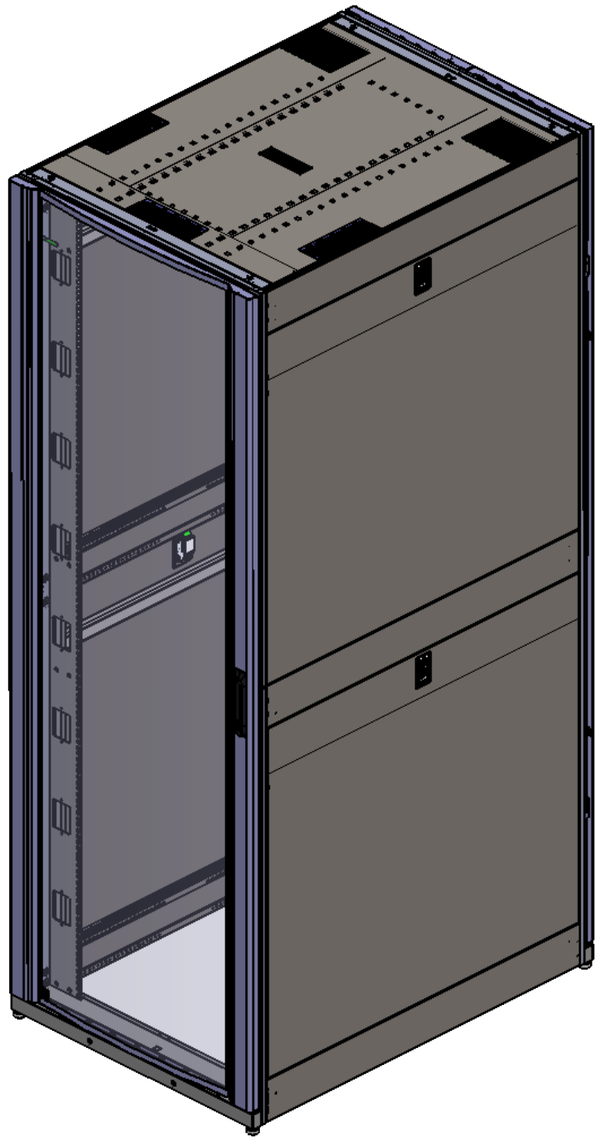

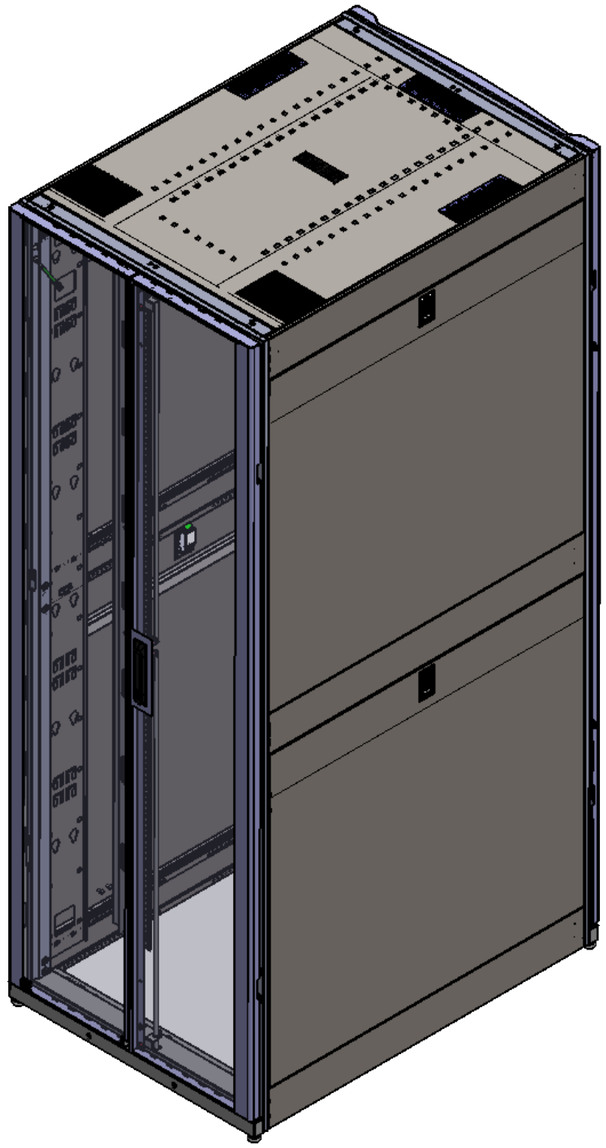

NOTES:

1.Dimensions of the cabinet is 750mm wide x 1200mm deep x 2435.3mm height. The maximum space is 52U. Surface is with RAL9005 black powder coated, with metallic luster.

2.The front door is a single perforated φ4.2 door. The rear door is splited perforated φ4.2 door. The maximum opening angle of the front door and rear door are no bigger than 135 degrees. The opening and closing of the door is flexible and the locking is reliable, which is convenient for equipment installation and maintenance. The front door and rear door can be interchange or right-left interchange toollessly.

3.The cabinet is equipped with 2pcs full length cable management(PDU channel). The width of the cable management (PDU channel) is 117mm which is not only suitable for wiring and installation of PDU, but also for installing the cable manager toollessly of RakworX PDU.

4.The cabinets are equipped with 4pcs mounting rails. The distance between the front door and the front mounting rails is 77mm. The mounting rails are clearly marked with "U" number.

5.Tool-free installation of the top cover, multiple cable inlets, convenient access for a large number of cables. Half size side panels are convenient for transportation and disassemble.

6.Joining brackets are shipped with the cabinets for joining the cabinets. There are reserved holes at the bottom of the cabinet for installation of the anti-seismic brackets.

MATERIAL&FINISH-SEE NOTES UNLESS OTHERWISE SPECIFIED AND BRACKEDTED REFERENCE DIMENSIONS ARE IN INCHES.	THIRD ANGLE PROJECTION	SCALE 1:50	A3	Branded CABINETS
DRAWN JK 2023/2/25	750mm*1200mm*52U		BC3359	REV. A01
CHECK ZXJ 2023/2/25				SHEET 1 OF 3

BC3359

REVISIONS			
REV.	DESCRIPTION	DATE	APPROVED

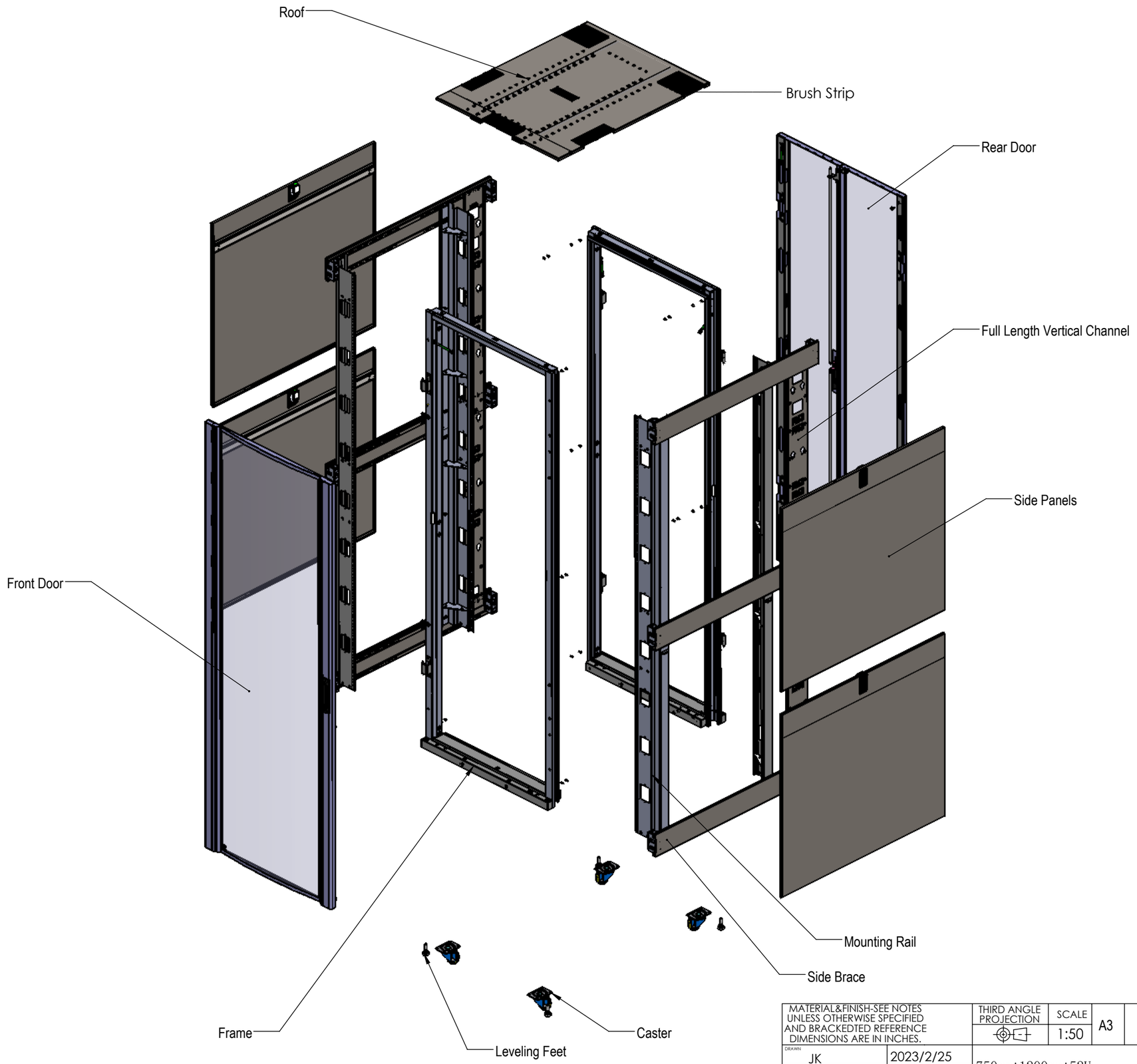

MATERIAL&FINISH-SEE NOTES UNLESS OTHERWISE SPECIFIED AND BRACKEDTED REFERENCE DIMENSIONS ARE IN INCHES.	THIRD ANGLE PROJECTION	SCALE 1:50	A3	Branded CABINETS
DRAWN JK	2023/2/25	750mm*1200mm*52U	BC3359	REV. A01
CHECK ZXJ	2023/2/25			SHEET 2 OF 3

BC3359

REVISIONS			
REV.	DESCRIPTION	DATE	APPROVED

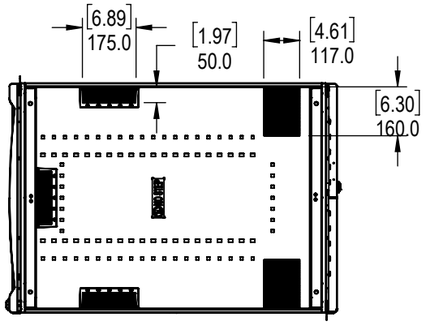

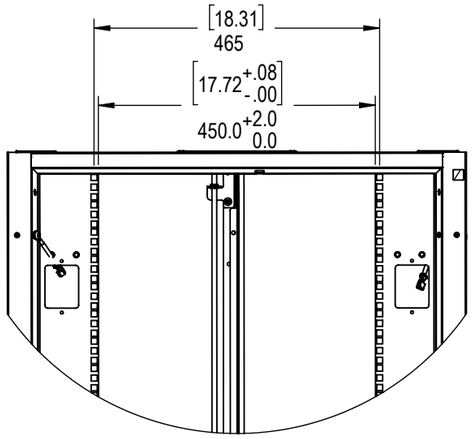

B
SCALE 1 : 10

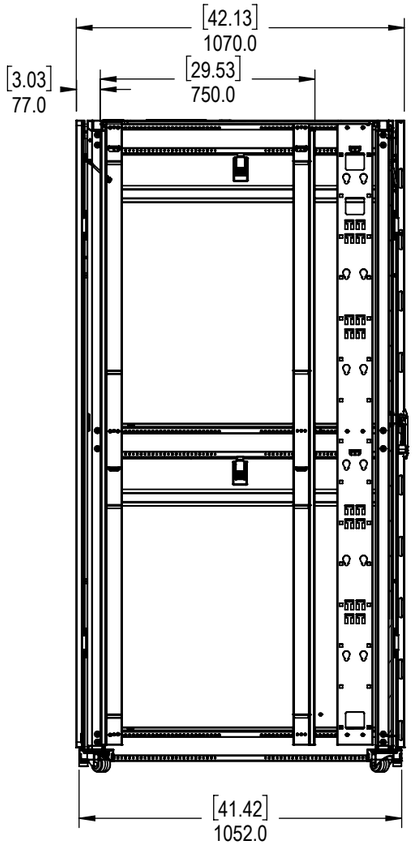

SECTION A-A

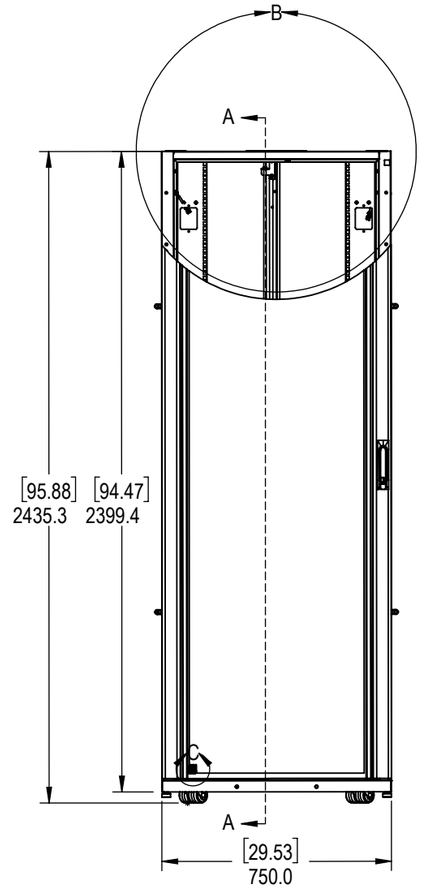

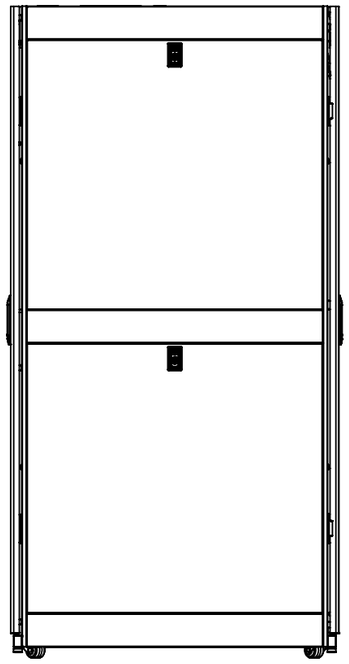

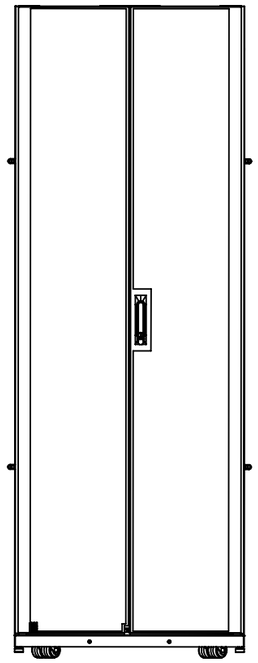

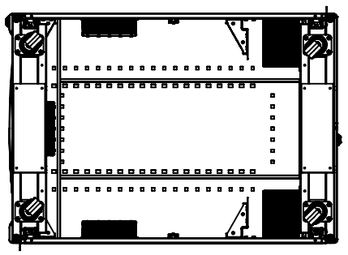

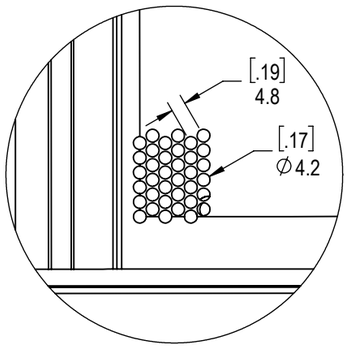

C
SCALE 1 : 2

MATERIAL&FINISH-SEE NOTES UNLESS OTHERWISE SPECIFIED AND BRACKEDTED REFERENCE DIMENSIONS ARE IN INCHES.		THIRD ANGLE PROJECTION	SCALE 1:50	A3	Branded CABINETS
DRAWN JK	2023/2/25	750mm*1200mm*52U		BC3359	REV. A01
CHECK ZXJ	2023/2/25				SHEET 3 OF 3